LONG SEAMS

COURSE	ORIENTATION
1(TOP)	45°
2	230°
3	45°

*VERT – TOP TO BOTTOM

SKIRT LONG SEAMS

COURSE	ORIENTATION
1	0°

Ship loose items:
NONE

*NOTE: ALL ELEVATIONS ARE PULLED FROM WELD SEAM FOR EASE OF FABRICATION

NOTE 7: SPOT RT PER CODE FOR △2 SHELL & SPOT RT ON HEAD TO SHELL SEAMS PER UW-11 (a)(5)(-b).

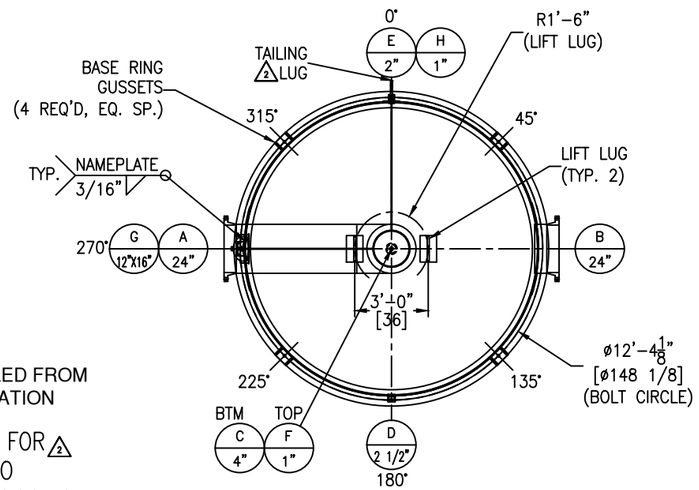

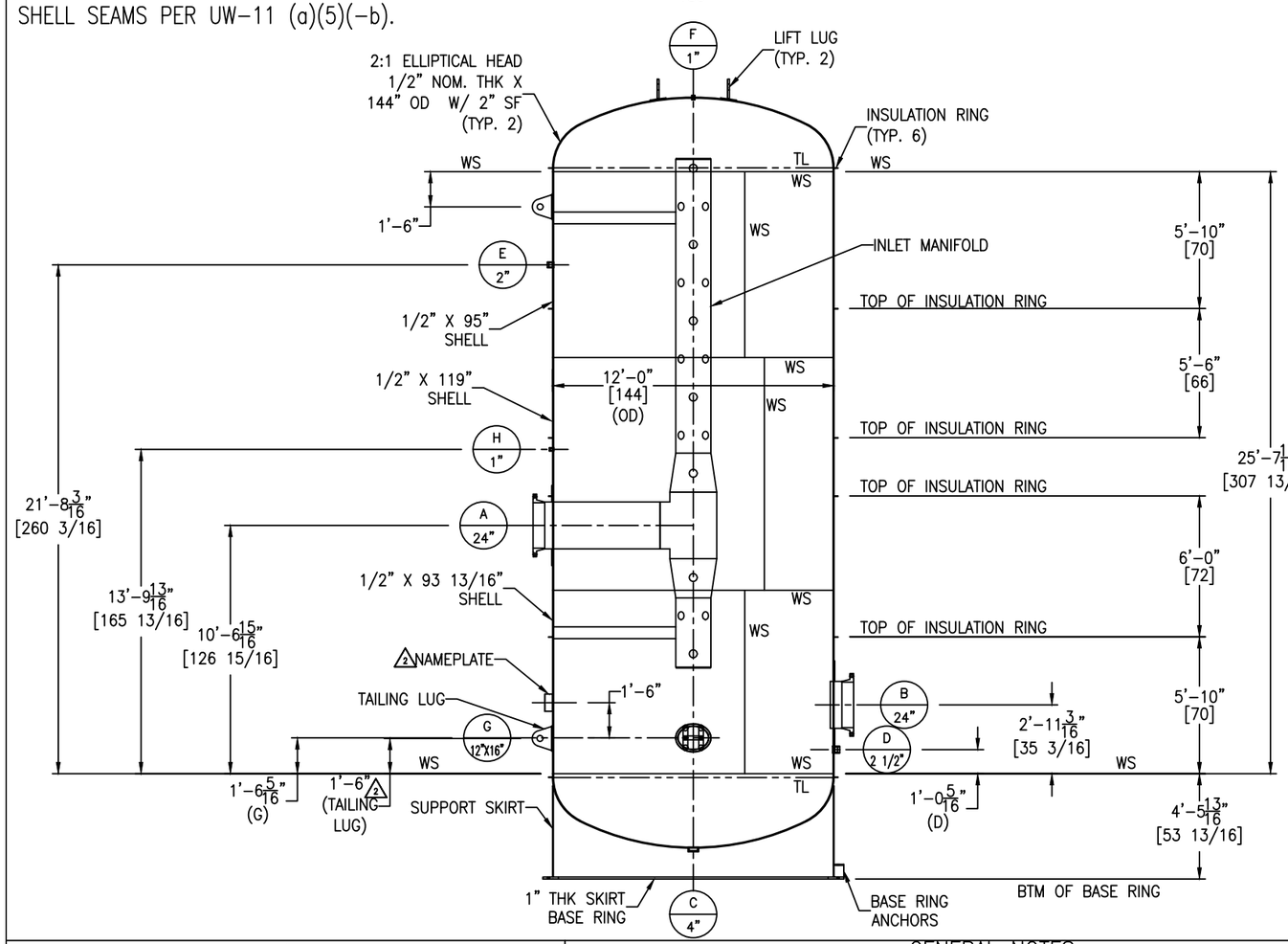

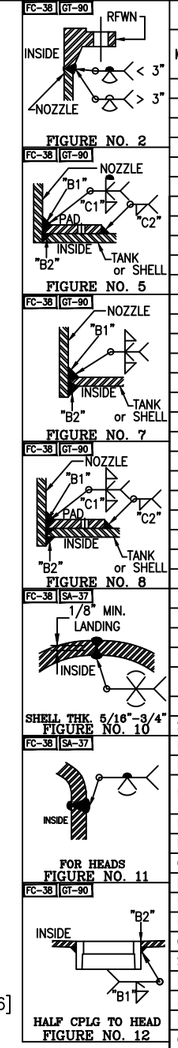

NOZZLE SCHEDULE

MARK	SERVICE	SIZE	RATING	TYPE / STYLE	NECK SCHED.	PROJECTION EXT. (℄)	PROJECTION INT. (MIN.)	WELD FIGURE	REPAD SIZE (WIDTH X THK.)	WELD SIZE "A1"	"A2"	"B1"	"B2"	"C1"	"C2"
A	INLET W/MANIFOLD	24"	150#	RFWN	STD	10"	SEE DWG	2,8	9" X 3/8"	–	–	1/2	3/8	3/8	3/8
B	OUTLET	24"	150#	RFWN	STD	10"	3/8"	2,8	10 1/2" X 3/8"	–	–	3/8	1/8	1/2	3/8
C	DRAIN	4"	3000#	THRD. HALF CPLG.	–	–	–	12	–	–	–	3/8	3/16	–	–
D	RELIEF/HYDRO	2 1/2"	3000#	THRD. FULL CPLG.	–	–	3/16"	7	–	–	–	3/16	3/16	–	–
E	HYDRO W/PLUG	2"	3000#	THRD. FULL CPLG.	–	–	3/16"	7	–	–	–	3/16	3/16	–	–
F	VENT	1"	3000#	THRD. FULL CPLG.	–	–	7/8"	7	–	–	–	3/16	1/8	–	–
G	MANWAY	12"X16"	300#	ELLIPTICAL MANWAY	1"	2"	1 7/16"	7	–	–	–	3/8	3/8	–	–
H	THERMOCOUPLE	1"	3000#	THRD. FULL CPLG.	–	–	3/16"	12	–	–	–	3/16	3/16	–	–

MATERIALS OF CONSTRUCTION

	VESSEL
SHELL	SA516-70
HEADS	SA516-70
RIM ANGLE	–
NOZZLE NECKS	SA53-B ERW & SA516-70 & SA234 WPB
NOZZLE FLANGES	SA105
MANWAY ASSEMBLY	CS
GASKETS (MANWAY)	NEOPRENE
BOLTS/STUDS (MANWAY)	SA193-B7
NUTS (MANWAY)	SA194-2H
REPADS	SA516-70
COUPLINGS	SA105
SUPPORTS/HOLD DOWNS	SA516-70
LIFTING/TAILING LUGS	SA36
DIFFUSER SUPPORT	SA516-70
INSULATION RINGS	SA36
GROUND LUG	–
VACUUM RINGS	–
BASE RING GUSSET	SA36
HANDRAIL	–
HANDRAIL CLIPS	–
PLATFORM	–
PLATFORM CLIPS	–
DIPTUBE SUPPORT	–
JACKET SHELL	–
JACKET HEADS	–
JACKET NOZZLE NECKS	–
JACKET NOZZLE FLANGES	–

DESIGN DATA

	VESSEL
DESIGN AND FAB. CODE	ASME
CERT. STAMP REQ'D.	YES
DESIGN PRESSURE	100 PSIG
DESIGN TEMPERATURE	250° F
MIN. DESIGN METAL TEMP.	-20° F @ 100 PSIG
OPERATING PRESSURE	–
OPERATING TEMPERATURE	–
JOINT EFFICIENCY HEADS	1.0
JOINT EFFICIENCY SHELL	△2 0.85
CORROSION ALLOWANCE	0"
SPECIFIC GRAVITY	1.0
EARTHQUAKE ZONE	Ss = (0.082) S1 = (0.11)
WIND LOAD	113 MPH
STRESS RELIEF	NOT REQ'D
RADIOGRAPHIC EXAM	SPOT (SEE NOTE 7)
DYE PENETRANT EXAM	NOT REQ'D
MAGNETIC PARTICLE EXAM	NOT REQ'D
HYDROSTATIC TEST	NOT REQ'D
PNEUMATIC TEST	110 PSIG / GAUGE #9
JKT DESIGN AND FAB. CODE	–
JKT CERT. STAMP REQ'D.	–
JKT DESIGN PRESSURE	–
JKT DESIGN TEMPERATURE	–
JKT MIN. DESIGN METAL TEMP.	–
JKT OPERATING PRESSURE	–
JKT OPERATING TEMPERATURE	–
JKT JOINT EFFICIENCY HEADS	–
JKT JOINT EFFICIENCY SHELL	–
JKT HYDRO TEST	–

VESSEL FINISH

INTERIOR WELD TREATMENT:	SAV TANK STANDARD
EXTERIOR WELD TREATMENT:	SAV TANK STANDARD
SAV TANK FINISHING STANDARD:	N/A
INSULATION:	2" BY OTHERS
PAINTING:	SEE NOTE 8

VESSEL CAPACITY AND WEIGHTS

OPERATING CAPACITY	–
FULL CAPACITY	25,000 GAL.
EMPTY SHIPPING WEIGHT	36,600 LBS.
WEIGHT FULL OF WATER	245,200 LBS.
WEIGHT FULL OF PRODUCT	245,200 LBS.

ASME SECT. VIII, DIV. 1
2023 EDITION

ENG. _____ DATE: _____
Q.C. _____ DATE: _____
A.I. _____ DATE: _____

This drawing is issued for customer approval. please review, make approval changes (if any) in red. check the appropriate box, sign & date.

☐ Approval – no changes. Please proceed with fabrication.
☐ Approved as noted. Please proceed with fabrication
☐ Not approved. Please make changes and resubmit.

Customer signature _____ Date _____

GENERAL NOTES

1.) COVER ALL FLANGES, OPENINGS & MACHINED SURFACES PRIOR TO SHIPMENT UNLESS OTHERWISE NOTED.
2.) BOLT HOLES TO STRADDLE 0° & 180° UNLESS OTHERWISE NOTED.
3.) REPADS TO HAVE (1) ø1/4" NPT TELL-TALE HOLES FOR PNEUMATIC TESTING AT 2 PSIG FOR PRESSURE RETAINING PARTS. ALL OTHER REPADS TO HAVE (1) ø1/4" WEEP HOLE AT LOWEST POINT ON PAD.
4.) ASME CODE VESSELS TO BE IN ACCORDANCE WITH UG-80 & UG-81. TOLERANCES: +/- 1/8" FOR DIMENSIONS AND +/- 2 DEGREES FOR ORIENTATIONS.
5.) ASME MATERIALS TO CONFORM TO THE FOLLOWING: FLANGES – B16.5, FITTINGS – B16.9 & COUPLINGS – B16.11.
6.)
7.) X-RAY: SPOT RT PER CODE FOR SHELL & SPOT RT ON HEAD TO SHELL SEAMS PER UW-11 (a)(5)(-b). △2
8.) PAINTING – INTERIOR: SANDBLASTED AND PAINTED (2) COATS TNEMEC EPOXOLINE SERIES 21 @ 4-6 MILS DFT EACH.
EXTERIOR: SANDBLASTED AND PAINTED (1) COAT RED OXIDE PRIMER @ 2-4 MILS DFT

REV	D.BY	C.BY	DATE	DESCRIPTION
				AS BUILT
2	RS	NP	7/29/25	CERTIFIED
1	AD	RS	7/21/25	APPROVAL REV 1
0	AD	RS	6/30/25	APPROVAL

△1 REVISIONS

Savannah Tank & Equipment Corp.
1517 Telfair Road, Savannah, GA 31415
(912) 233-8902

DRAWN BY: AD
CHK'D BY: RS
APPROVED BY: NP
SCALE: 1/4" = 1'-0"

RECO COMMERCIAL SYSTEMS
BUFFER TANK #1
EQUIP. #
CUST. PO #PO3662

DRAWING NO.: 056-25-1 SHT 1 OF 4 REV. SET 2

FC-38

SKIRT LONG SEAMS

COURSE	ORIENTATION
1	0°

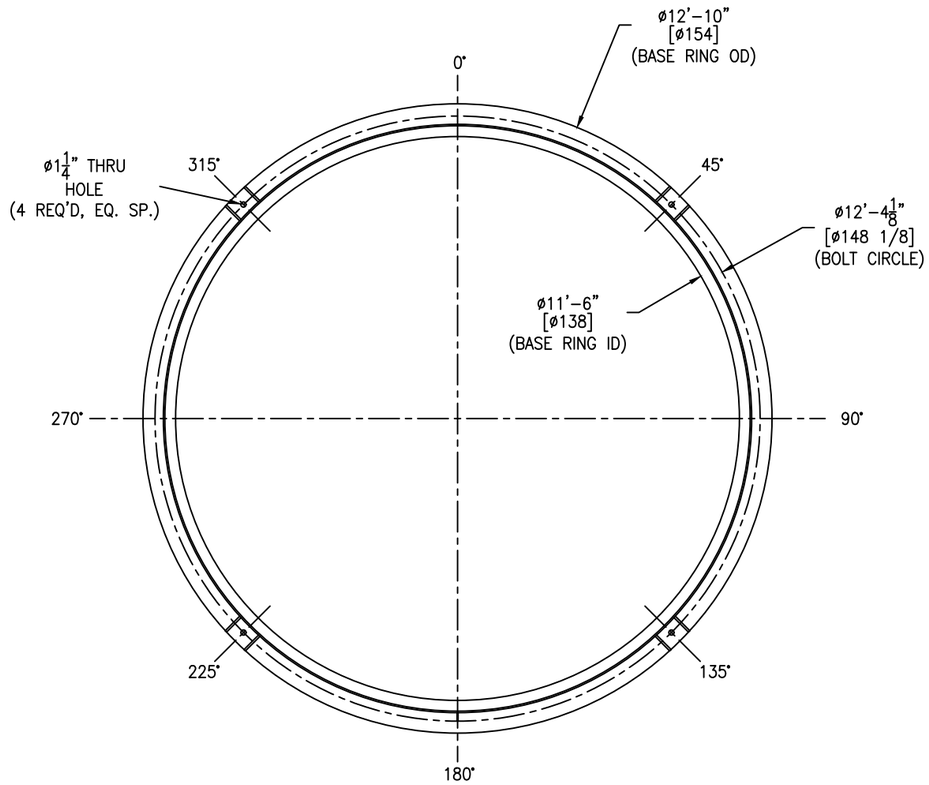

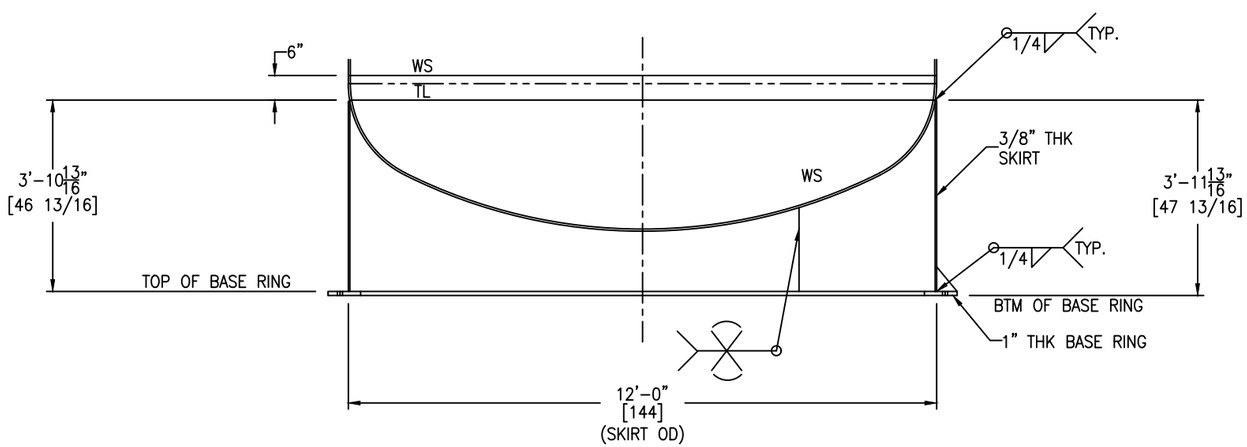

SKIRT DETAIL

SCALE: 1/2" = 1'-0"

FC-38

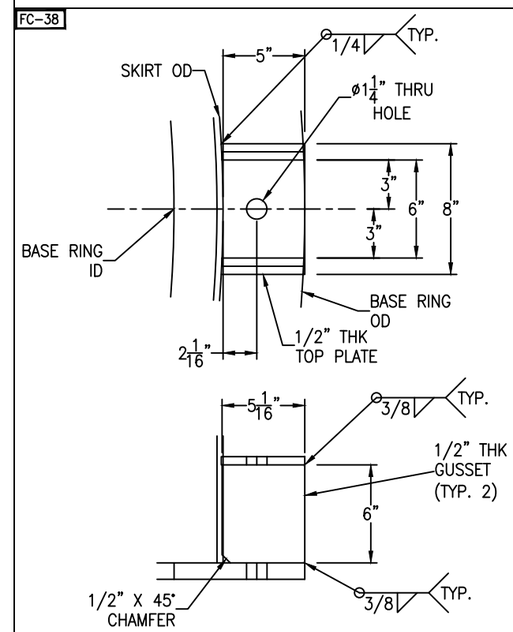

BASE RING ANCHOR DETAIL

(4 REQ'D) SCALE: 2" = 1'-0"

FC-38

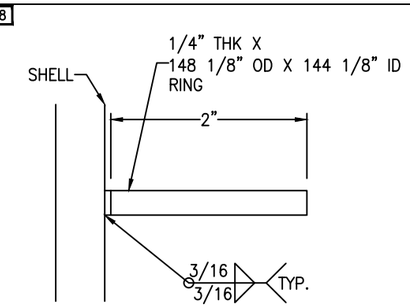

INSULATION RING DETAIL

(6 REQ'D) SCALE: 1'-0" = 1'-0"

REV	D.BY	C.BY	DATE	DESCRIPTION
				AS BUILT
2	RS	NP	7/29/25	CERTIFIED
1	AD	RS	7/21/25	APPROVAL REV 1
0	AD	RS	6/30/25	APPROVAL

⚠1 REVISIONS

Savannah Tank & Equipment Corp.
1517 Telfair Road, Savannah, GA 31415
(912) 233-8902

DRAWN BY: AD
CHK'D BY: RS
APPROVED BY: NP
SCALE: 1/4" = 1'-0"

RECO COMMERCIAL SYSTEMS
BUFFER TANK #1
EQUIP. #
CUST. PO #P03662

DRAWING NO.: 056-25-2 SHT 2 OF 4 REV. SET 2

FC-38

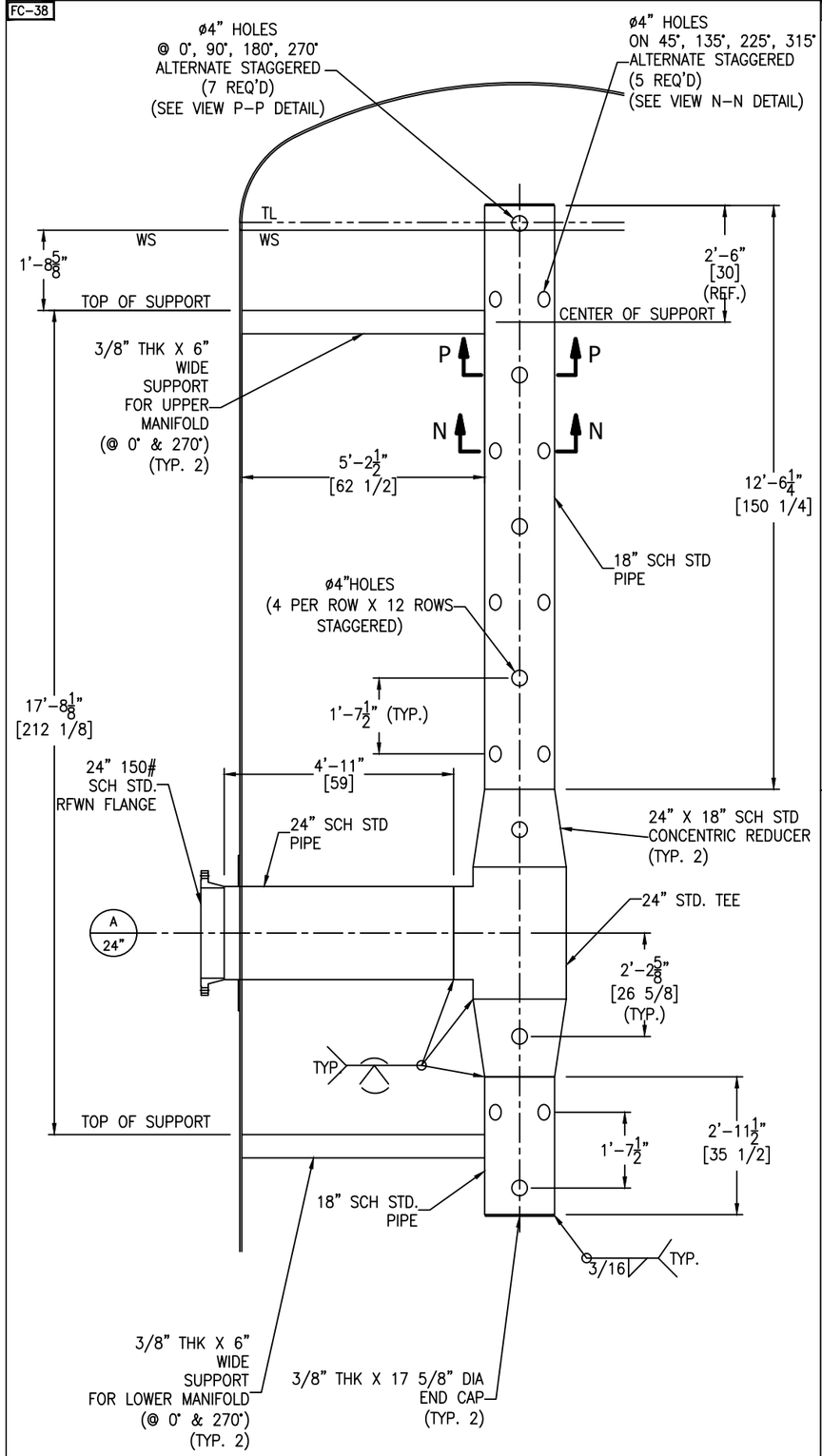

NOZ. A AND INLET MANIFOLD DETAIL

SCALE: 1/2" = 1'-0"

FC-38

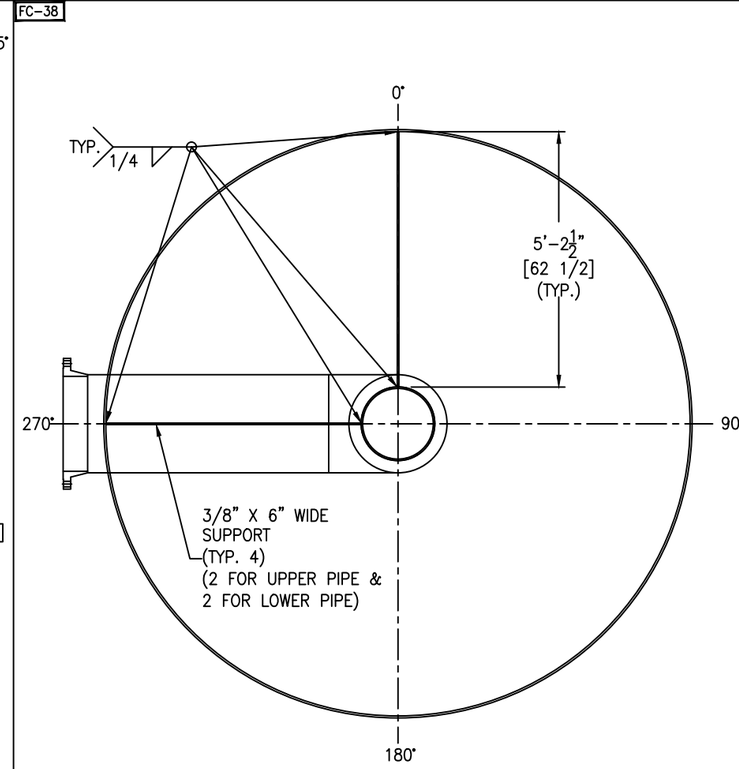

INLET MANIFOLD SUPPORT DETAIL

SCALE: 1/2" = 1'-0"

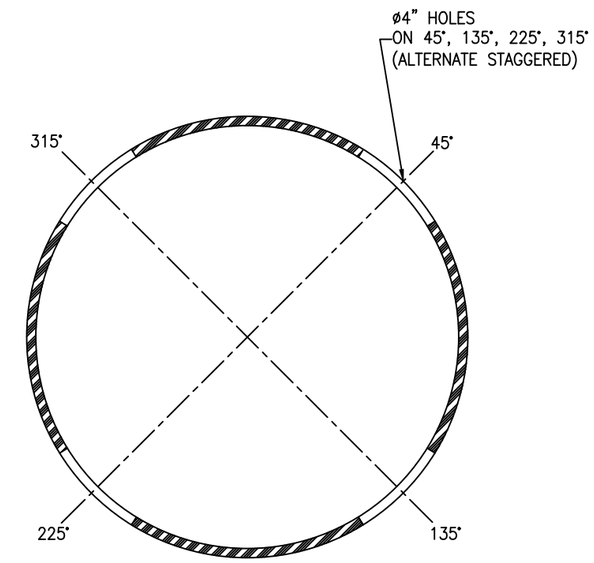

VIEW N-N FOR INLET MANIFOLD

(5 REQ'D) SCALE: 3" = 1'-0"

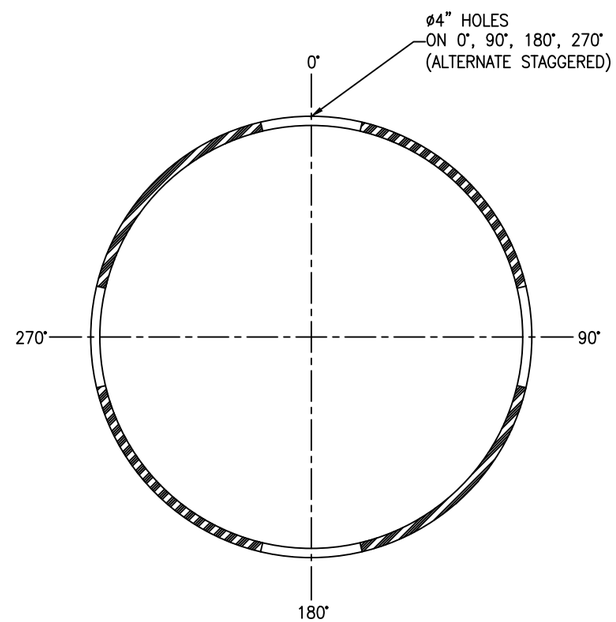

VIEW P-P FOR INLET MANIFOLD

(7 REQ'D) SCALE: 3" = 1'-0"

REV	D.BY	C.BY	DATE	DESCRIPTION
				AS BUILT
2	RS	NP	7/29/25	CERTIFIED
1	AD	RS	7/21/25	APPROVAL REV 1
0	AD	RS	6/30/25	APPROVAL

⚠1 REVISIONS

Savannah Tank & Equipment Corp.
1517 Telfair Road, Savannah, GA 31415
(912) 233-8902

DRAWN BY: AD
CHK'D BY: RS
APPROVED BY: NP
SCALE: 1/4" = 1'-0"

RECO COMMERCIAL SYSTEMS
BUFFER TANK #1
EQUIP. #
CUST. PO #P03662

DRAWING NO.: 056-25-3 SHT 3 OF 4 REV. SET 2

FC-38

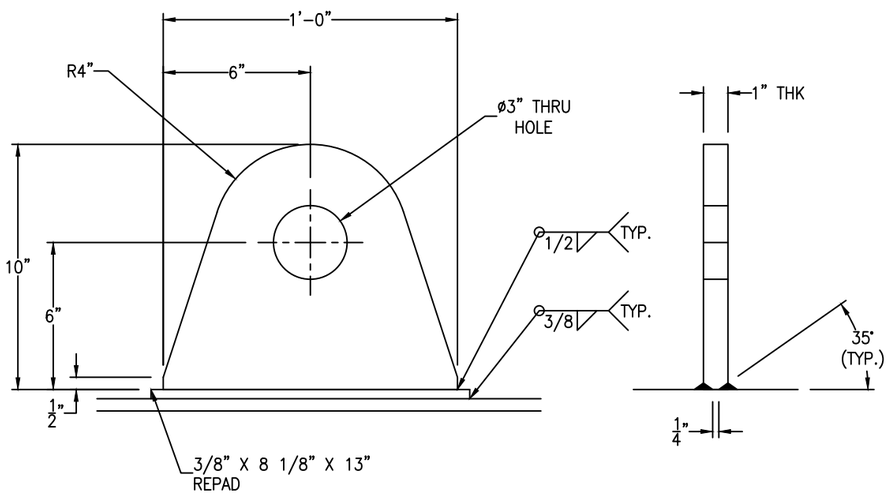

LIFT LUG & TAIL LUG DETAIL

(2+1 REQ'D) SCALE: 3" = 1'-0"

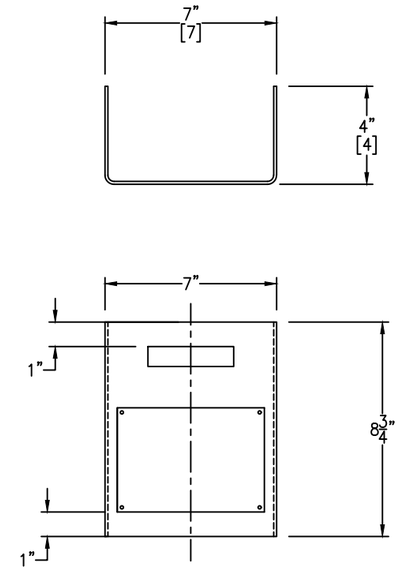

△2 NAMEPLATE BRACKET DETAIL

SCALE: 3" = 1'-0"

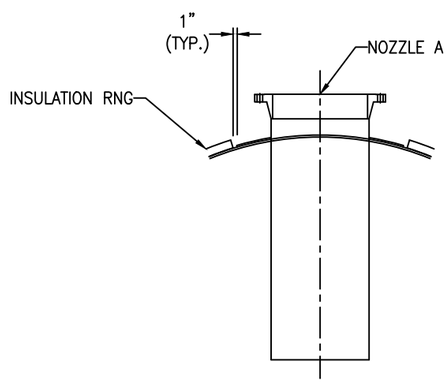

INSULATION RING CUTOUT FOR NOZ. A DETAIL

SCALE: 1/2" = 1'-0"

REV	D.BY	C.BY	DATE	DESCRIPTION
				AS BUILT
2	RS	NP	7/29/25	CERTIFIED
1	AD	RS	7/21/25	APPROVAL REV 1
0	AD	RS	6/30/25	APPROVAL

△1 REVISIONS

Savannah Tank & Equipment Corp.
1517 Telfair Road, Savannah, GA 31415
(912) 233-8902

DRAWN BY: AD
CHK'D BY: RS
APPROVED BY: NP
SCALE: 1/4" = 1'-0"

RECO COMMERCIAL SYSTEMS
BUFFER TANK #1
EQUIP. #
CUST. PO #P03662

DRAWING NO.: 056-25-4 SHT 4 OF 4 REV. SET 2